Section 2 — Numerical methods in engineering

These examples show FEAKalc3D applied to a truss, a beam with distributed loading, and a plane frame with support settlement.

The accompanying ANSYS results provide a reference for comparing displacements and member actions across different structural models. (results match)

Educational Example Only – Refer to current Australian Standards and project-specific requirements before design.

Question.1

Numerical Methods In Engineering *Prac 2 - solutions*

1. ***A truss*** is formed by three members of the same length 4 *m* and is supported and loaded as shown below. A downward settlement 0.005 *m* occurs at support 3. The stiffness *EA* for all members is equal to $8x10^6$ *N*. Using ANSYS, determine the unknown displacements and the member forces for the truss.

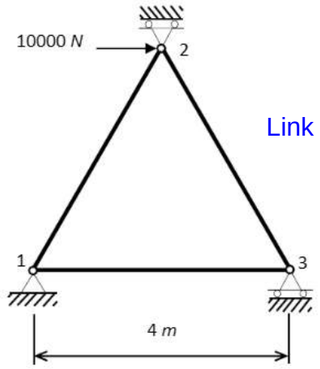

Link to this document (accessed online 9/11/2026)

https://www.studocu.com/en-au/document/western-sydney-university/numerical-methods-in-engineering/numerical-practical-2-solutions/18151071?sid=751983151794283228

Solution

```
***** POST1 NODAL DEGREE OF FREEDOM LISTING *****

 LOAD STEP=     1  SUBSTEP=     1
  TIME=    1.0000      LOAD CASE=   0

 THE FOLLOWING DEGREE OF FREEDOM RESULTS ARE IN THE GLOBAL COORDINATE SYSTEM

   NODE      UX          UY          UZ          USUM
      1   0.0000      0.0000      0.0000      0.0000
      2  0.14960E-01  0.0000      0.0000     0.14960E-01
      3  0.12600E-02-0.50000E-02  0.0000     0.51563E-02

MAXIMUM ABSOLUTE VALUES
NODE          2           3           0           2
VALUE   0.14960E-01-0.50000E-02  0.0000     0.14960E-01
```

Deformations

```
***** POST1 ELEMENT SOLUTION LISTING *****

 LOAD STEP     1  SUBSTEP=     1
 TIME=    1.0000          LOAD CASE=  0

 EL=       1 NODES=       1       2 MAT=     1  XC,YC,ZC=  1.000      1.732      0.000     AREA=
1.0000                   LINK180
 FORCE=  14960.      STRESS=  14960.      EPEL= 0.18700E-02
 TEMP=    0.00    0.00  EPTH=  0.0000

 EL=       2 NODES=       2       3 MAT=     1  XC,YC,ZC=  3.000      1.732      0.000     AREA=
1.0000                   LINK180
 FORCE= -5039.9      STRESS= -5039.9      EPEL=-0.62999E-03
 TEMP=    0.00    0.00  EPTH=  0.0000

 EL=       3 NODES=       1       3 MAT=     1  XC,YC,ZC=  2.000      0.000      0.000     AREA=
1.0000                   LINK180
 FORCE=  2519.9      STRESS=  2519.9      EPEL= 0.31499E-03
 TEMP=    0.00    0.00  EPTH=  0.0000
```

FEAKalc 3D

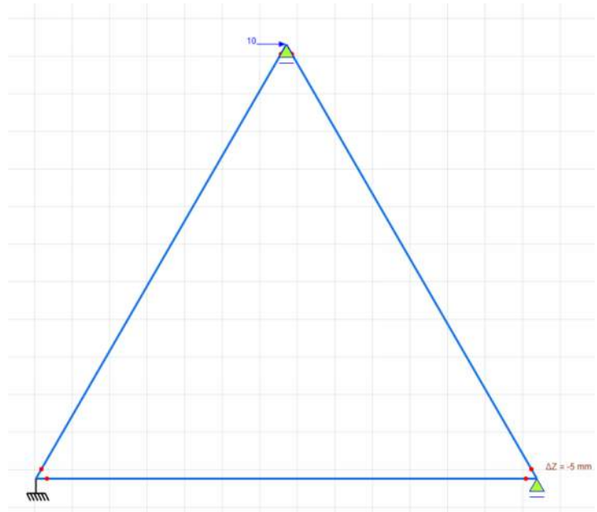



Question.2

A **beam** is under loads shown below. E = 200 GPa, A = 10^3 mm^2, and I = 1 x 10^6 mm^4 for the beam. Determine the deflection at point C and structural forces and structural moments for all members of the beam using ANSYS.

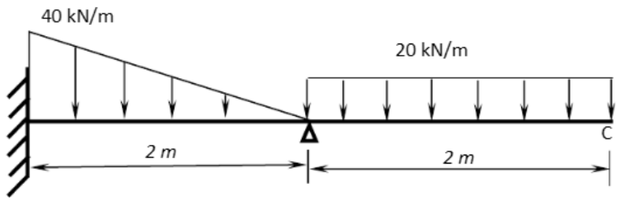

Solution

```
***** POST1 NODAL DEGREE OF FREEDOM LISTING *****

 LOAD STEP=     1  SUBSTEP=     1
  TIME=     1.0000      LOAD CASE=   0

 THE FOLLOWING DEGREE OF FREEDOM RESULTS ARE IN THE GLOBAL COORDINATE SYSTEM

   NODE      UX          UY          UZ          USUM
      1    0.0000      0.0000      0.0000      0.0000
      2    0.0000      0.0000      0.0000      0.0000
      3    0.0000     -0.37447     0.0000      0.37447

 MAXIMUM ABSOLUTE VALUES
 NODE            0           3           0           3
 VALUE     0.0000     -0.37447     0.0000      0.37447
```

Displacements

```
 ***** POST1 NODAL DEGREE OF FREEDOM LISTING *****

 LOAD STEP=     1  SUBSTEP=     1
  TIME=     1.0000      LOAD CASE=   0

 THE FOLLOWING DEGREE OF FREEDOM RESULTS ARE IN THE GLOBAL COORDINATE SYSTEM

   NODE      ROTX        ROTY        ROTZ        RSUM
      1    0.0000      0.0000      0.0000      0.0000
      2    0.0000      0.0000    -0.87037E-01  0.87037E-01
      3    0.0000      0.0000    -0.22037      0.22037

 MAXIMUM ABSOLUTE VALUES
 NODE            0           0           3           3
 VALUE     0.0000      0.0000    -0.22037      0.22037

 ***** POST1 ELEMENT NODE TOTAL FORCE LISTING *****

 LOAD STEP=     1  SUBSTEP=     1
  TIME=     1.0000      LOAD CASE=   0

 THE FOLLOWING X,Y,Z FORCES ARE IN GLOBAL COORDINATES


 ELEM=       1  FX          FY          FZ
      1    0.0000     -2037.0      0.0000
      2    0.0000     -37963.      0.0000

 ELEM=       2  FX          FY          FZ
      2    0.0000     -40000.      0.0000
      3    0.0000    -0.17653E-07  0.0000
```

Shear

```
***** POST1 ELEMENT NODE TOTAL FORCE LISTING *****

 LOAD STEP=     1  SUBSTEP=     1
  TIME=     1.0000      LOAD CASE=   0

 THE FOLLOWING X,Y,Z FORCES ARE IN GLOBAL COORDINATES


 ELEM=       1  MX          MY          MZ
      1    0.0000      0.0000      9259.3
      2    0.0000      0.0000      40000.

 ELEM=       2  MX          MY          MZ
      2    0.0000      0.0000     -40000.
      3    0.0000      0.0000    -0.15586E-08
```

Moments

FEAKalc 3D



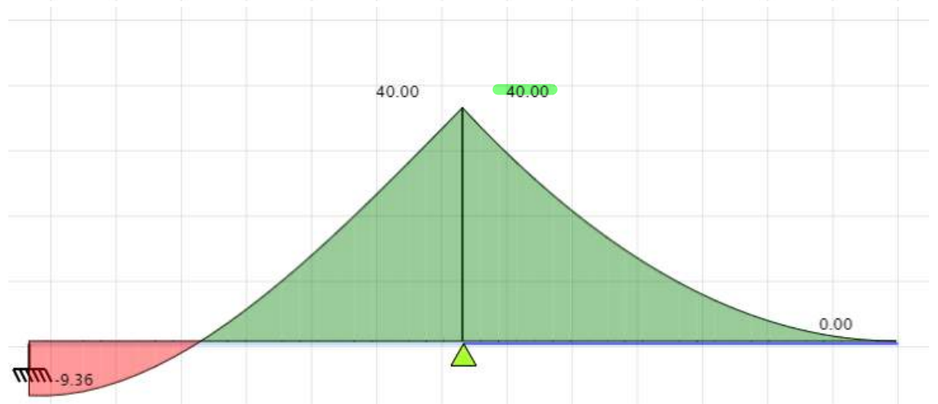



Question.3

Consider the **plane frame** shown below. A downward settlement 0.01 *m* occurs at support 3. Determine the deflection at point 2, and structural forces and structural moments for all members of the frame using ANSYS.

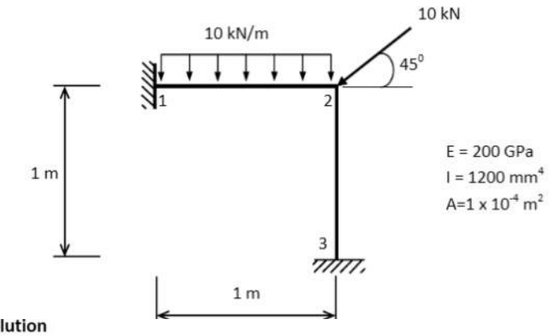

E = 200 GPa
I = 1200 mm^4
A=1 x 10^{-4} m^2

Solution

```
***** POST1 NODAL DEGREE OF FREEDOM LISTING *****

LOAD STEP=     1  SUBSTEP=     1
 TIME=    1.0000      LOAD CASE=   0

THE FOLLOWING DEGREE OF FREEDOM RESULTS ARE IN THE GLOBAL COORDINATE SYSTEM

  NODE      UX          UY          UZ          USUM
     1   0.0000      0.0000      0.0000      0.0000
     2 -0.38420E-03-0.10571E-01  0.0000     0.10578E-01
     3   0.0000     -0.10000E-01  0.0000     0.10000E-01

MAXIMUM ABSOLUTE VALUES
NODE        2           2           0           2
VALUE  -0.38420E-03-0.10571E-01  0.0000     0.10578E-01


***** POST1 NODAL DEGREE OF FREEDOM LISTING *****

LOAD STEP=     1  SUBSTEP=     1
 TIME=    1.0000      LOAD CASE=   0

THE FOLLOWING DEGREE OF FREEDOM RESULTS ARE IN THE GLOBAL COORDINATE SYSTEM

  NODE      ROTX        ROTY        ROTZ        RSUM
     1   0.0000      0.0000      0.0000      0.0000
     2   0.0000      0.0000     0.42649     0.42649
     3   0.0000      0.0000      0.0000      0.0000

MAXIMUM ABSOLUTE VALUES
NODE          0           0           2           2
VALUE    0.0000      0.0000     0.42649     0.42649


***** POST1 ELEMENT NODE TOTAL FORCE LISTING *****

LOAD STEP=     1  SUBSTEP=     1
 TIME=    1.0000      LOAD CASE=   0

THE FOLLOWING X,Y,Z FORCES ARE IN GLOBAL COORDINATES


ELEM=       1  FX          FY          FZ
     1  -7683.9     -5644.4      0.0000
     2   7683.9     -4355.6      0.0000

ELEM=       2  FX          FY          FZ
     2  -612.85      11427.      0.0000
     3   612.85     -11427.      0.0000


***** POST1 ELEMENT NODE TOTAL FORCE LISTING *****

LOAD STEP=     1  SUBSTEP=     1
 TIME=    1.0000      LOAD CASE=   0

THE FOLLOWING X,Y,Z FORCES ARE IN GLOBAL COORDINATES


ELEM=       1  MX          MY          MZ
     1   0.0000      0.0000     -1053.2
     2   0.0000      0.0000      408.78

ELEM=       2  MX          MY          MZ
     2   0.0000      0.0000     -408.78
     3   0.0000      0.0000     -204.07
```

FEAKalc 3D

